NEOBOTIX

MP – 400

Operating Manual

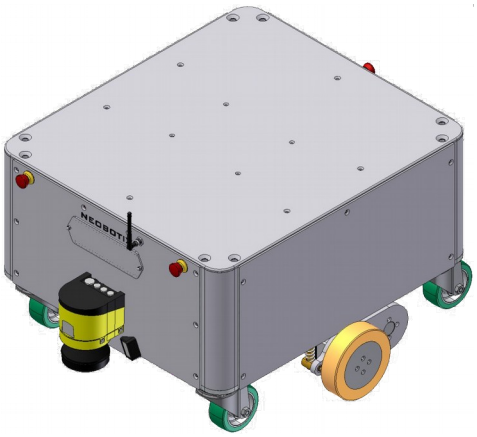

V3.2

12 May 2016

Contents

1 Introduction

1.1 General information

Mobile robot platforms are also known as automatic guided vehicles (AGV). This means the mobile system is capable of moving freely without the need of guide wires, optical guide strips or a magnetic sensor strip stuck to the floor marking the planned route.

Instead of hardware installations in the surrounding the approached stations and the connecting pathways are defined by software. Using a simple 2D map of the surrounding, there are just a few mouse clicks necessary to define routes for the robot. After this the controller software is able to:

- move on predefined pathways
- plan a path by itself between target stations
- detect and evade obstacles on the pathway
- execute programmed actions within the map

The mobile robot navigates autonomously by acquiring sensor data of environment features such as walls and corners and comparing this data to an internal map.

1.2 Range of applications

The mobile robot may be used in a large variety of applications:

- Autonomous transportation tasks in industrial environments
- Automatic measurement of physical data in large areas (e.g. gas concentrations, temperatures, noise, etc.)
- Autonomous operations within large areas (e.g. surveillance, part handling, etc.)
- Telepresence while controlled via wireless LAN

1.3 About this document

This document describes the basic handling of the MP-700 mobile robot platform. It is meant as a guideline when installing and maintaining the necessary hardware.

For further information concerning the graphical user interface or extraordinary applications please refer to the “PltfCtrlGUI – Operating Manual” or contact Neobotix.

The warning triangle marks paragraphs that concern the danger of injuries, damages or both. Please read these paragraphs very carefully!

The prohibition sign marks actions or applications the robot is not intended for and which might result in damages, reduced life expectancy and loss of warranty.

The light bulb marks paragraphs that mention common problems, misunderstandings or errors and is meant to be a help in troubleshooting.

2 Product information

2.1 Product description

The mobile robot MP-700 (and all varieties and models based on it) is an autonomous robot vehicle for a wide range of applications.

Its central differential drive with two big drive wheels provides high manoeuvrability on different surfaces and exact, efficient runs across longer distances. Measurement data from the laser scanners can be used for localisation, navigation and collision avoidance. These scanners also monitors up to sixteen different user-defined safety fields in front of the robot. As soon as an object is detected within the currently activated field, the robot is immediately set to emergency stop.

These features enable the MP-700 to exactly determine its current position within the working area, to plan paths to arbitrary positions and to safely avoid collisions with passers-by or other dynamic obstacles.

Additional components and systems can be mounted onto and into the robot. They can be powered by the robot's internal power supply and can be controlled by the on-board computer.

2.2 Intended use

The MP-700 has been designed for daily operation in factory workshops and test halls. It can be used for transportation of materials, parts and devices. Furthermore the MP-700 can easily be used in research projects as mobile carrier of sensor equipment, robot arms and other special devices.

Depending on the intended application the MP-700 can be used on its own, in combination with other robot vehicles and in combination with stationary systems. Furthermore, application specific extensions can be integrated into the basic platform. These might be a customised cargo area, a robot arm or special sensors.

The MP-700 has been designed with focus on indoor operation. It is not recommended to operate the MP-700 outdoors during rain, fog or snow.

2.3 Improper use

The MP-700 must not be used for transportation of passengers in any way. No person must ride on the robot itself, nor must the MP-700 be used to move any other vehicle or hanger with passengers aboard.

The MP-700 must not be operated in any publicly accessible area without safety assessment. If the robot has been modified either permanently (e.g. by mounting additional components) or temporarily (e.g. by loading cargo) its safe operation must be assessed and approved.

Without the safety approval described above, the MP-700 must at no times be used without supervision of a qualified operator if there are guests, passers-by or other people unfamiliar with the robot within the working area.


The robot must never be operated in areas where there are staircases leading down, elevated platforms or other possibilities for falling or dropping down. This may cause serious injuries or death!

2.4 Working areas

The working area of the MP-700 must be protected against rain and have a sufficiently firm and clean floor. The floor must be even and horizontal.

Slopes, edges, steps and unevenness can result in problems when the robot is moving or with the localisation. Under some circumstances the robot might then not be able to continuously determine its exact position and therefore might plan unnecessary or problematic paths or might even be unable to reach its destination.

Under certain conditions, rain or heavy splash water might enter the robot and cause damages. Flying sparks, heavy dust and similar dirt may affect or damage the sensors and thus might make the operation of the mobile robot inefficient or unsafe. Dirt and liquids on the floor may lead to slippage and problems of localisation and navigation.

The robot does not feature any sensor for detecting staircases, holes or other areas where it may drop down. In case of loss of localisation or faulty programming the robot might fall down such places.

Always check for and secure all places where the robot might drop down before bringing it into operation.

2.5 Qualified personnel

This product must only be modified, commissioned, operated and serviced by qualified personnel. Qualified personnel are defined as persons who

- due to their specialist training and experience have adequate knowledge for the work at hand

and

- who have been instructed by the responsible robot operator in the operation of the robot or its parts and the currently valid safety guidelines

and

- are sufficiently familiar with the applicable official health and safety regulations, directives and generally recognised engineering practice (e.g. DIN standards, VDE stipulations, engineering regulations from other EC member states) that they can assess the work safety aspects of the robot

and

- who have access to this manual and who have read it.

The following groups of persons are generally not considered qualified:

- Employees, interns or other academic staff not familiar with the robot,
- visitors and quests,
- all members of other departments of the company or institution in which the robot is operated.

This list is not intended to be exhaustive.

3 Safety instructions

The mobile robot MP-700 (and all varieties and models based on it) is an autonomous vehicle which is not only capable of performing very different tasks but can also react dynamically to its environment. Under some circumstances this might result in situations in which the robot's behaviour appears to be surprising or incomprehensible to persons who do not know the MP-700 in detail.

Because of this it is essential that all of the following safety instructions are followed at all times. A safe and efficient operation of the robot can only be achieved under this condition.

3.1 Briefing

Always make yourself familiar with the robot, its control and behaviour before starting your work or setting up autonomous processes. Every other concerned person (e. g. workers, programmers, visitors etc.) should also be briefed accordingly.

Due to the complexity of the robot system it is strongly recommended to attend a schooling. This document is only provided as a work of reference when facing minor and easy to solve problems concerning the hardware. All other problems, mistakes and difficulties can best be avoided by an in-depth schooling for programmers and a proper briefing for operators.

3.2 Safety system

The mobile robot is equipped with several safety features. Additional features can be installed if necessary. Before starting to work with the robot a thorough check is required to determine whether the present safety features provide a sufficient level of safety.

Some of the safety features, especially the laser scanner, might have been reduced or even disabled in order to make transport to the customer's site possible or more convenient. These features must be set up and tested by a qualified technician prior to the first operation of the robot system!

Emergency stop buttons

As soon as one of the emergency stop buttons is pressed, all drives are immediately disconnected from power and the safety brakes of all motors are engaged. This is implemented completely in hardware and cannot be overridden or changed by software thus guaranteeing maximum safety.

Laser scanner

The safety approved laser scanner S300 can monitor user-defined safety fields in front of the robot which are dynamically activated according to the current velocity of the platform. If required these fields can also be activated by an application specific control software. In this case only the control software is responsible for the correct activation of the safety fields according to the current condition.

As soon as a person or obstacle is detected within the currently active safety field the robot is immediately set to emergency stop. The stop will be reset automatically after the field has been cleared. No manual reset is required in this case.

The laser scanner has been approved as safety device with Performance Level d and SIL2. It fully replaces the safety bumpers which have been required for autonomous vehicles before.

Special functions

In case third-party software is meant to run on the robot or the remote control computer this software can be enabled to trigger an emergency stop and or to reset the safety system. Additional safety devices (e.g. radio controlled emergency stop systems) can also be integrated into the mobile robot.

Please contact Neobotix if you plan to implement any special functions.

3.3 Cooperating with the robot

Close proximity

As long as the robot is not in full emergency stop, a minimum distance should always be kept. Direct contact to the active robot system is to be avoided.

Climbing up onto the mobile platform and / or riding on it are not allowed at any time.

Medium proximity

When approaching the robot or working in its presence, increased attention and caution are required. The safety features of the mobile robot have to be set at such a level that imminent dangers are being detected and that injuries or damages can be avoided.

In case the safety features have to be reduced due to the requirements of the process it might be necessary to prohibit the presence of people in the robot's surrounding. In these cases only the owner of the robot system can be held responsible for the safe operation.

General surrounding

As long as the safety features of the mobile robot are set up properly, the presence of persons or vehicles in the robot's wider working area is allowed. Please contact Neobotix for further advise if needed.

All persons working in the same area as the robot should nevertheless be informed about the robot's behaviour and the possible dangers. Appropriate behaviour and consideration is necessary.

3.4 Bringing into service

After installing the mobile robot as well as after making changes to the environment or the work processes a supervised test-run has to be performed. This test has to cover all possible steps of the process. Autonomous operation must not be resumed without a successful test-run.

This also applies to modifications of routes and target positions, parameters, environmental conditions and higher level control systems.

Repairs, maintenance work and other changes in the system's hardware should also be followed by a test-run.

The Neobotix GmbH cannot be held responsible in any way for injuries or damages which are caused by any problem that could have been detected or prevented by a supervised test-run.

3.5 Modifications of the system

Please inform Neobotix before executing any kind of mechanical, electrical or software work or modification. Some detailed information or instruction might be necessary.

In case one or more robots are to be modified, it is strongly recommended to consult Neobotix in order to provide the appropriate training and information for all technicians and programmers. The functions and safety of all modified robots have to be checked

and ensured before bringing them into service.

All guaranties are void in case of any unauthorised or improper modification of the mobile robot system. All responsibilities for the further operation of the robot are devolved to whoever commands or executes such modifications.

3.6 Expected misuse

Passenger transportation

Transporting passengers on or by the MP-700 is dangerous and strictly prohibited due to a number of reasons.

The Neobotix GmbH cannot be held responsible for any injuries and / or damages caused to or by transporting passengers with the mobile robot.

Safety fields

The laser scanners' safety fields have to be configured and tested by the operator prior to taking the robot into service. If more than one safety field are to be used they need to be dynamically activated according to the current state and intended action of the robot.

The operator takes full responsibility for the safe activation of the safety fields. Safety fields that are set up incorrectly or have been activated faultily will result in an unsafe and possibly dangerous operation of the mobile robot.

Working area

When choosing and preparing the working area special care has to be taken to ensure both a reliable localisation and motion control. The robot must never be operated in areas where there are staircases leading down, elevated platforms or other possibilities for falling or dropping down.

The localisation system of the MP-700 requires clearly visible, unique landmarks and an exact, easy to match map of the surrounding. Further information on this topic can be found in the “PlatformCtrlGUI – Operating Manual”. Please contact Neobotix in case of any problems.

The motion control system of the MP-700 will only work reliably on an even ground and without slippage. Dirt like dust, sand, oil or water may cause the wheels to slip and the robot to move uncontrolled. This might even result in a loss of localisation which might make the robot leave the predefined path and enter prohibited or dangerous areas.

Mechanical overload

The defined maximum payload must not be exceeded. Overloading the robot may lead to reduced life expectancy of the drives and to damages to the robot. It might also affect the driving properties, resulting in unwanted movements and leaving the predefined paths.

Electrical overload

The robot's on-board power supply must not be overloaded. Extreme overload may lead to overheating, damages to the electrical installation and to short circuiting.

Please contact Neobotix before modifying the electrical system of the mobile robot.

4 Transport

4.1 Packaging

The mobile robot MP-700 is packed in a rugged wooden box which can be reused for future transports. If the original box cannot be used any more it is recommended to build a new box of similar design.

The base plate of the box has to be strong enough to carry the robot and to take asymmetric forces, e.g. when moving the box with a forklift. When packing the robot it has to be secured against unintended slipping by sufficient cushioning. In order to prevent dust and dirt from the cushioning material to enter the robot, the maintenance opening should be closed and all connectors should be fastened or covered prior to packing the robot.

Depending on the cushioning material it might be advisable to protect the brake-release-button against unintended activation. If this button is pressed during transport, the robot may move inside the box and the batteries might get discharged. Furthermore, the key of the key switch should be removed and transported separately to avoid damages to the key and the switch. Further information on the control elements can be found in chapter “Bringing into service”.

Unpacking the robot

If the robot is shipped in the original transport box only the lid and the one side that is marked accordingly should be removed. The lid can be used as a ramp to help unloading the robot. It should be placed directly in front of the box's open side in a way that creates a track with only a small slope. Then all small components and the cushioning material can be taken out.

As soon as the robot is cleared it can be pushed out of the box and down the ramp. Press and hold the brake-release-button to open the brakes while moving the robot by hand.

Please be aware that the robot will roll down the ramp and has to be handled by the operator. This requires sufficient physical strength.

Never try to move the robot by holding it at the laser scanner or the control elements. None of these components has been designed for lifting forces and they may be damaged.

Figure 1: Position of the brake-release-button

When shipped as airfreight the batteries have been disconnected for improved safety. Please see chapter “Maintenance – Hardware – Batteries” for information on how to reconnect the batteries.

4.2 Long distance transport

As long as the robot is packed properly there are no special requirements when shipping the MP-700. Only in case the robot has been exposed to very low temperatures (below -10°C) it should be left to reach room temperature again before turning it on. This will prevent damages to the electrical and electronic components.

If the brake release button was covered and the key switch was removed there is no risk of the robot being turned on during the transport or the batteries being discharged.

To eliminate every risk when shipping the robot as airfreight it is recommended to disconnect the batteries prior to shipping. The batteries are leak proof and approved for airfreight. Please contact Neobotix if you require the according documents.

4.3 Short distance transport

For short distances the MP-700 can also be transported in the trunk of a car without the wooden box. It still must be secured against sliding and should only be moved very carefully while outdoors.

When preparing a transport please mind the weight of the robot's batteries. It is recommended to take all batteries out of the robot for the time of the transport. This will reduce the weight of each element, making them easier to handle.

If batteries are taken out of the MP-700 always make sure to take ALL the batteries out. As soon as any battery is taken out the remaining ones can move inside the platform. This may lead to cable damage, short circuiting and heavy damage to the robot.

5 Bringing into service

5.1 Operating elements

The figures below show the sides of the MP-700 and the most important operating elements.

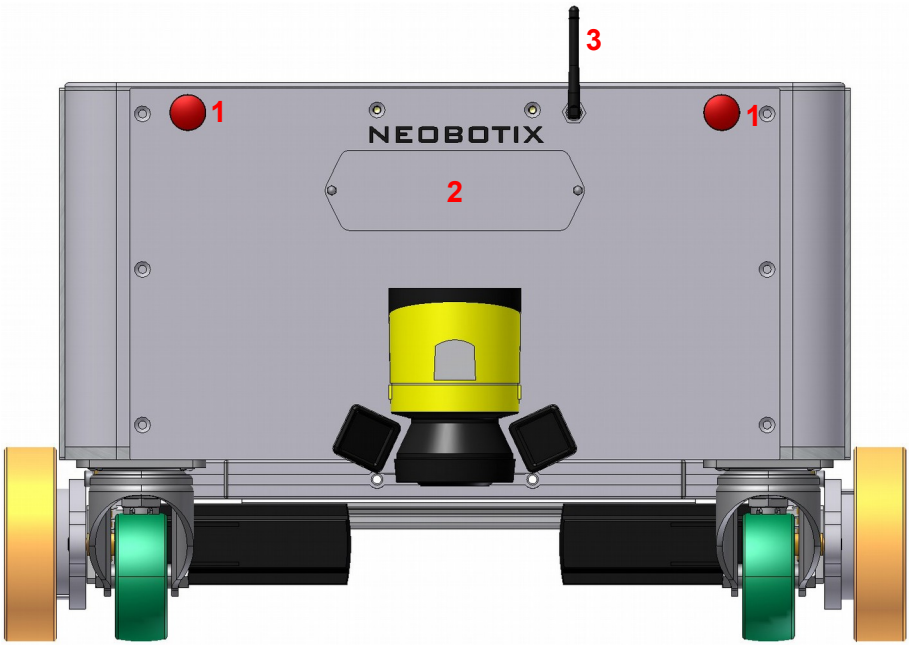

Figure 2: Front of the MP-700

1: Emergency stop button *2: Computer access* *3: WLAN antenna*

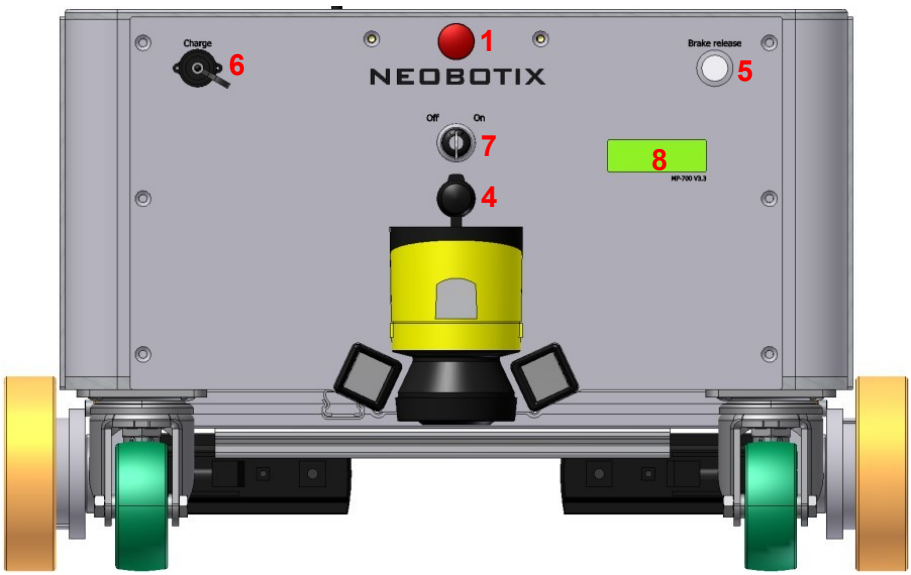

Figure 3: Rear of the MP-700

4: Joystick receiver *5: Brake release button* *6: Charging socket*

7: Key switch *8: LC-Display*

Emergency stop buttons

When one of these buttons is pressed the robot is immediately set to emergency stop. All drives are disconnected from power supply and the fail-safe brakes are engaged. This state can be reset by unlocking the emergency stop buttons and turning the key switch clockwise to position II for a few seconds.

Key switch

Turning on: Turn and hold the key in position II for a few seconds until the LCD lights up and the status messages appear.

Resetting after emergency stop: Turn the key to position II for about one second.

Shutting down: Turn the key to position I to immediately turn off the robot. In case the on-board computer is shut down properly (e.g. via remote access), the robot will turn off automatically.

Brake release button

Pressing this button will open the motors' brakes thus allowing the robot to be moved manually even while it is turned off.

If the control software is running and the emergency stop buttons are not pressed, the motor amplifiers will still stabilise the robot's position when pressing the brake-release-button. In this case at least one of the emergency stop buttons must be pressed before the robot can be moved manually.

Charging socket

The battery charger can be manually connected to this socket. In case the battery charger is integrated into the robot, the power cable can be connected here. Further information can be found in chapter “Battery charger”.

LC-Display

This display shows the most important status information. Please refer to chapter “The LC-Display” for further details.

Access to the on-board computer

This maintenance hatch provides access to the computer interfaces. The complete back panel of the integrated Mini-ITX computer is available.

5.2 Preparations

After the MP-700 has been moved out of its transport box, as described in chapter “Transport”, it should be cleaned from dust and any remaining bits of the cushioning. Especially the black cover of the laser scanners' optics needs to be clean for the robot to operate properly.

To move the robot by hand, press and hold the “Brake release button” (see previous section). The robot can then be easily moved by pushing or pulling the top aluminium frame.

Never touch the cover of the laser scanner or the emergency stop buttons to move the robot!

In case more than one mobile robot is to be used in the same area the robots should be controlled by wired joysticks. This will ensure an unambiguous allocation of the joysticks. The joysticks can be plugged into the USB socket with the black rubber cover that otherwise holds the joystick receiver (4).

5.3 First tests

Turn the key switch clockwise to position II to start up the robot.

Insert the according batteries into the joystick if necessary and wait until the platform has started the control software and finished the initialisation. The display will show “Robot ready” as soon as the robot is ready for operation.

Figure 4: The wireless joystick

Press the activation button on the joystick to start the hardware-joystick-mode. In this mode the robot can be controlled manually by using the two analogue sticks. Use the left stick to move forward and backward and the right one to steer. The speed of the robot is analogue to the position of the left stick, which allows very accurate manoeuvres when driving slowly.

The robot will only move as long as the dead man's button is pressed. This prevents unintended movements and will stop the robot if the radio connection is interrupted.

In hardware-joystick-mode most safety features, including obstacle avoidance, are disabled. Collisions at a high speed are possible!

The emergency stop buttons might be pressed, caused by the cushion or the transport. If the robot does not move and the display shows “Emergency stop” release both buttons by turning them clockwise, turn the key switch clockwise and try again. Further information on the status messages can be found in chapter “The LC-Display”.

Move the robot carefully to a position where it does not obstruct anybody and press the activation button again to leave the hardware-joystick-mode. By doing so, the robot will switch to parking mode with the brakes locked and minimum power consumption.

5.4 Configuring the safety fields

To achieve both high agility and sufficient safety of operation, the safety fields of the laser scanner must be activated according to the intended motion. Prior to the first operation the safety fields have to be defined with consideration of the application's requirements, the working environment and the desired speed. If the safety fields are to be actively selected instead of being automatically activated, the wiring needs to be changed and a routine to select and activate the safety fields has to be implemented in the control software.

The configuration and diagnostics software CDS from Sick can be used to conveniently configure the scanner's safety fields. The configuration cable that was included in delivery can be used to connect the scanners to the serial port of any external computer running the CDS.

By default the digital inputs A and B of the laser scanner are connected to the encoder of one servo motor and the safety fields are activated according to the current speed. To select the field by software the inputs have to receive antivalent signals from two relays on the robot's main control board. The CDS can be used to show the current state of the

inputs as well as the selected safety field and the live scan.

The Sick default password is **SICKSAFE**.

At delivery a set of safety field is defined which will avoid collisions in most situations. These settings must be tested and, if necessary, be adjusted prior to the first operation. Otherwise the required level of safety cannot be guaranteed.

6 Setting up the hardware

6.1 Battery charger

The battery charger needs a power supply of 110VAC, 60Hz or 230VAC, 50Hz.

The charger must be placed in a dry environment. Do not cover the housing, so appropriate cooling is possible, and avoid direct sunlight. If the robot is meant to use the automatic charging station, connect the charger's power outlet to the station's cable and screw the connectors tightly together.

The robot can be manually recharged by connecting the battery charger's plug to the socket on the platform (see chapter "Operating elements"). The socket is covered by a cap that can be unscrewed by hand.

Recharging is done completely automatic after the connection is established and the battery charger is connected to the main power supply. For recharging it does not matter whether the robot is switched on or off. The only difference is the time needed for a full recharge. With the on-board electronic active, a recharge might take significantly longer, depending on the workload of the on-board computer.

The battery charger features an overload protection, thus allowing the robot to be permanently (e.g. overnight) connected to the charger. If the robot remains switched on while being connected to the charger (e. g. while programming) it might be necessary to switch the battery charger off and on once a day.

Do not disconnect the cable while the platform is still recharging! Always switch off the battery charger first or disconnect it from the main power supply before removing the charging cable to avoid wear of contacts.

7 Installing the host computer

A common PC system is sufficient to run the Neobotix graphical user interface.

7.1 Windows operating system

Installing the Java Runtime Environment

The Neobotix GUI is programmed in Java and thus platform independent. This also means that a Java Runtime Environment and in some cases a library for 3D-calculations must be installed before using the GUI.

If there is none or an older version on the host computer please download the latest Java version from www.java.com and install it manually. In case any additional software is required, please check the content of the CD or DVD that was included in delivery.

Installing the GUI

The graphical user interface does not need to be installed. Simply copy the folder “NeoPltfGUI_<version>” from the disk to your hard drive.

To run the GUI just double-click on *start.bat* or create a shortcut on your desktop by right-dragging the *start.bat*-icon onto the desktop and selecting *Create shortcut here* from the pop-up-menu.

7.2 Linux operating system

Installing the Java Runtime Environment

Most common Linux distributions already come with an installed Java Runtime Environment. Please make sure that a Java 7 Runtime Environment or later is available. For Debian/Ubuntu distributions installation starts after entering

```
apt-get install openjdk-7-jre
```

on root command line. For other distributions please use your package manager.

Installing the GUI

The graphical user interface does not need to be installed. Instead simply copy the folder “PltfGUI” from the CD to your hard drive.

To run the GUI open a terminal, change to the location of “PltfGUI” and enter

```
java -jar PlatformCtrlGUI.jar
```

7.3 Setting up the network

If ordered, a wireless LAN-device was delivered together with the platform to allow easy connecting to the robot. In case the settings of this device need to be changed, please use the software on the according driver disc and work directly on the platform’s on-board computer as described in chapter “Maintenance”.

Make sure that both platform and host PC are in the same subnet. Please refer to the system administrator of the local computer network.

8 The LC-Display

The LC-Display shows the current state of the platform's hardware and the mode the robot is in.

B:100%

The current charge level of the batteries. Due to the batteries characteristics the actual battery voltage may be higher than the platform's rated main voltage.

Nominal voltage	Shut-down	Working range	Charging
24V	≤ 22V	23V .. 25V	25V .. 28V
48V	≤ 44V	46V .. 52V	52V .. 56V

Table 1: Voltages of different batteries

MM – – – I U – S

Shows the current status of the platform's internal communication. For easy failure analysis the different devices are indicated with a single character once they are connected to the bus.

M: motor amplifier **G:** GyroBoard **I:** IOBoard

U: USBoard **R:** RadarBoard **S:** On-board PC

Status message

The current state of the robot is described in the second line of the display.

Not connected: The control software is not yet connected to the robot's main control board.

Board connected: The control software is active and the robot is fully operational.

Checksum error: The protocol versions of the control software and the RelayBoard do not match.

Emergency stop: One of the emergency stop buttons has been pressed.

Scanner stop: An obstacle has been detected within the laser scanner's safety field. As soon as the obstacle has been removed, the safety system will be reset automatically.
<u>If a FlexiSoft safety controller is installed, all stops are indicated with this message.</u>

Power relay error: The power relays are stuck. Please contact Neobotix.

EMButton fail: One of the emergency stop buttons does not operate properly. Please contact Neobotix.

Safety relay error: One of the safety relays is stuck. Please contact Neobotix.

T:20C:

This is the temperature inside the platform, measured at the main control board.

00:01:05:

The bottom right shows the uptime since startup.

9 Maintenance

9.1 Software

Apart from research or maintenance it will not be necessary to connect mouse or keyboard because the robot can be controlled via wireless LAN and the graphical user interface. Even most software updates can be performed by remote access.

The robot features a maintenance hatch in the front of the platform providing full access the platform's on-board-PC.

9.2 Hardware

The robot's hardware is almost maintenance-free and not intended to be manipulated unless when used for research. Please contact Neobotix before disassembling the robot!

To achieve a long life of the platform and guarantee a satisfying operation, the platform should be checked and cleaned regularly.

Cleaning

Cleaning the various sensors is indispensable to assure that the robot can move safely and swiftly through its environment. The sensors can be cleaned with a soft brush or wet cloth.

Be very careful not to scratch the cover of the laser scanners or the membranes of the ultrasonic sensors. Damage to these components might cause severe malfunctions!

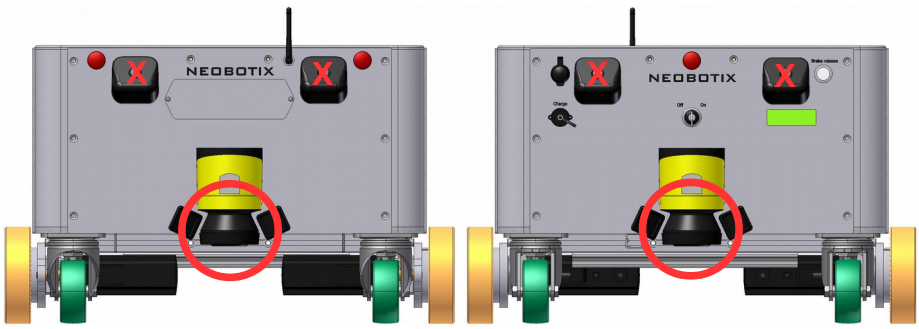

Figures 5 & 6: Laser scanners (O) and ultrasonic sensors (X) of the MP-700

Batteries

After approximately 1000 complete charging cycles the batteries might have lost some of their capacity and need to be replaced.

There are several measures to prolong the life of the batteries and to save costs and resources:

- Recharge the robot whenever possible
- Avoid deep discharge and reaching the automatic shut-down voltage
- Charge the robot while it does not need to move (e. g. while programming)
- Do not leave the robot with discharged batteries for a long time

In case you want to replace the batteries yourself please follow these steps:

1. Switch off the robot
2. Switch off and disconnect the battery charger. If the battery charger is installed into the robot, disconnect the power cable from the robot

3. Remove all screws of the side cover plates and take these plates off.
4. Disconnect the six dark grey connectors directly above the six outer batteries (three on each side of the platform). Then carefully pull those batteries out of the robot.
5. Now disconnect the two inner batteries and also take them out.
6. The new set of batteries can not be installed by following the previous steps in reverse order. The battery connectors cannot be mismatched and any battery can be connected anywhere in the platform. Nevertheless no cable must be strained or squeezed.
7. After connecting all eight batteries (make sure not to miss any connection) the side plates can be mounted and the robot can be put back to operation.

Please contact Neobotix immediately in case of any problems with the batteries.

The chapter "Taking out of service" provides important information about dealing with old or damaged batteries.

Fuses

The mobile robot features the following fuses:

ID	Circuit	Location	Type	Current	Speed
F1	48V terminals	RelayBoard	Micro 5x20	3A	slow
F3	Emergency stop buttons	RelayBoard	SMD	0,5A	fast
F4	Brake release button	RelayBoard	SMD	1A	fast
F5	48V logic supply	Rear DIN rail	Blade fuse	3A	slow
F6	Drive power supply	Rear DIN rail	Blade fuse	7,5A	slow

10 Taking out of service

10.1 Disassembly

Once the mobile robot has reached the end of its lifetime it should be disassembled and its components should be recycled.

Before the robot can be disassembled the battery charger, any other external power supply and the batteries must be disconnected from the robot. It is strongly recommended to wait for at least 30 minutes after disconnecting all power sources before starting the disassembly. This will help to discharge any electrical energy that might be left in the system.

Disassembly of the robot should be done by technicians only, preferably someone who has already worked on the robot in the past and knows its technical details. This will ensure:

- Fast and trouble-free disassembly
- Reduced risk of injuries or damages to components that are to be reused
- Proper sorting of parts according to materials and way of recycling

10.2 Recycling

Reusable components

Many components of the mobile robot (e. g. the servo motors and the amplifiers) have a very long life expectancy and will most probably still be usable when the overall system has reached the end of its lifetime.

Please check carefully which components can be reused immediately or in later projects and make sure that they are removed with care.

Reusing components does not only help the environment by reducing resource consumption but will also safe a significant amount of money.

Frame

The frame of the robot is made up from aluminium parts and steel connectors. Both materials should be separated completely and can then be sold to certified recycling companies.

Electrical components

Electronic scrap and electrical wires are both a source of valuable resources as well as a threat to the environment and must not be treated like consumer waste.

All electrical wires and components must therefore be collected and sold to or deposited at the appropriate recycling facilities.

Batteries

The leak proof AGM batteries used in the mobile robot contain battery acid that is fully absorbed in glass fibre.

Under European law this kind of battery must only be returned to certified recycling companies.

11 Component Diagram

The figure below shows a component diagram of the MP-700.

The platform is moved by a differential wheel configuration, using two servo drives with motor controllers.

Sensor data for navigation are acquired by one or two laser scanners and odometry of drives.

Possible collisions between the platform and obstacles are detected with the laser scanners and optional ultrasonic sensors. The laser scanner can also be used to monitor the surrounding of the robot and set the robot to emergency stop if a person or obstacle comes too close. The ultrasonic sensors have no safety function and only affect the path planning.

User interface components are a LC-Display in the rear of the platform, a joystick for remote control and other application specific indicators and control elements.

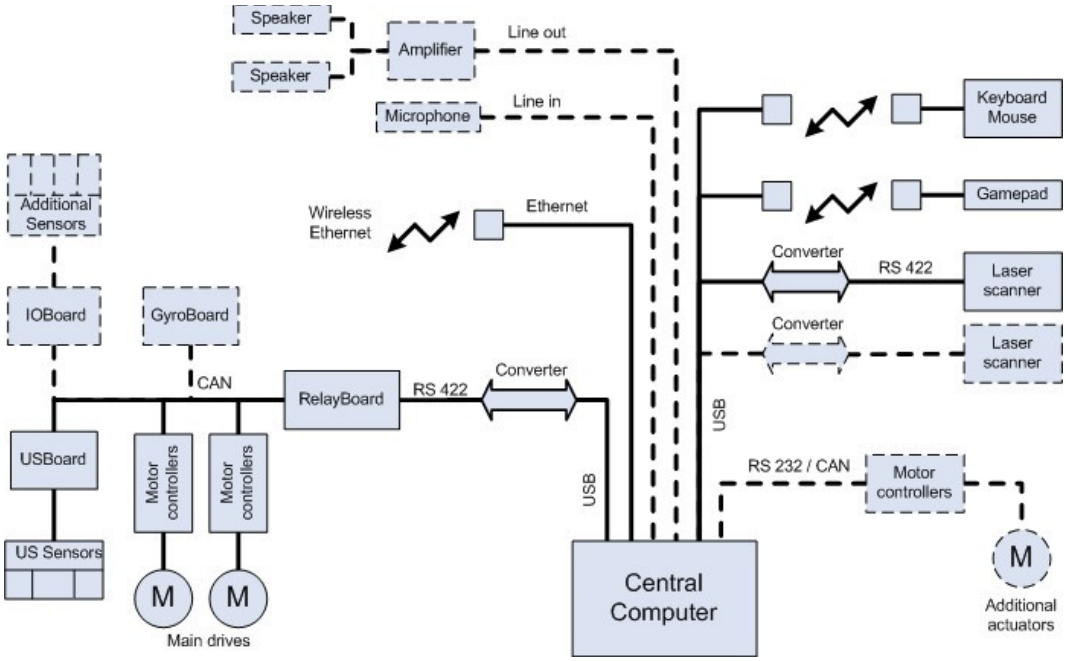

Figure 7: Component diagram of MP-700

12 Technical data

12.1 Mechanical properties

Dimensions

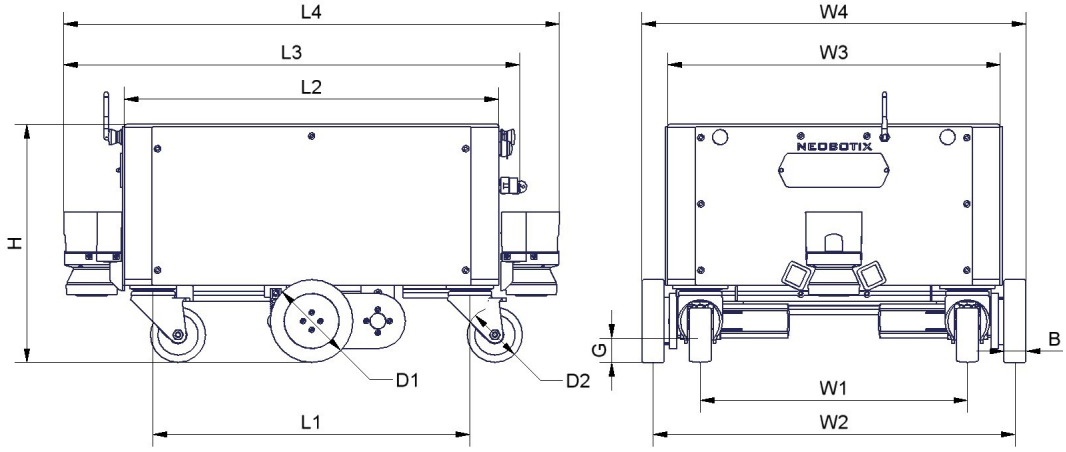

Figure 8: Dimensions of the MP-700

All dimensions are in millimetres.

Description	Symbol	Value
Diameter of the drive wheels	D1	150
Diameter of the castor wheels	D2	100
Width of the drive wheels	B	40
Ground clearance	G	44
Height of the platform	H	431
Track width of the castor wheels	W1	484
Track width of the drive wheels	W2	655,5
Width of the top plate	W3	602
Wheelbase of the castor wheels	L1	574
Length of the top plate	L2	678

Default configuration (laser scanners centred):

Description	Symbol	Value
Overall width	W4	695,5
Length with one laser scanner	L3	826
Length with two laser scanners	L4	898

Corner configuration (laser scanners at front right and rear left corner, rotated by 45°):

Description	Symbol	Value
Overall width	W4	775
Overall length	L4	851

Absolute maximum ratings

Exceeding these ratings might cause malfunctions or damage the robot!

Description	Units	Value
Payload (on top of platform)	kg	300
Maximum speed	m/s	1.0
Maximum bumpiness to pass over (≤ 0.25m/s)	mm	5
Maximum bumpiness to pass over (full speed)	mm	2
Maximum acceleration	m/s^2	0.5
Storage temperature	°C	-20 .. +60
Operating temperature (environmental temperature)	°C	+0 .. +35

Positions of sensors

All distances are in millimetres, measured relative to the platforms coordinate system. All angles are in degree, measured counter-clockwise from the driving direction.

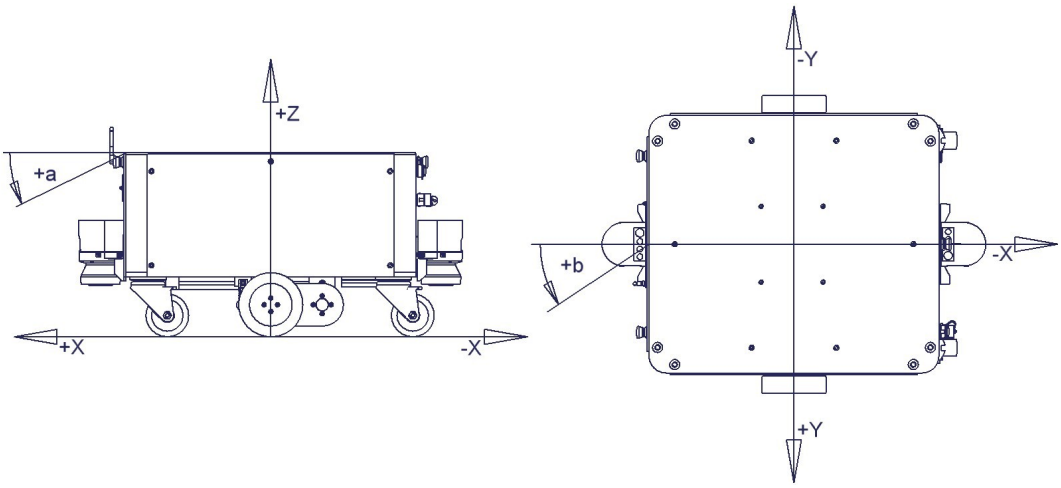

Figure 9: Coordinate system of the MP-700

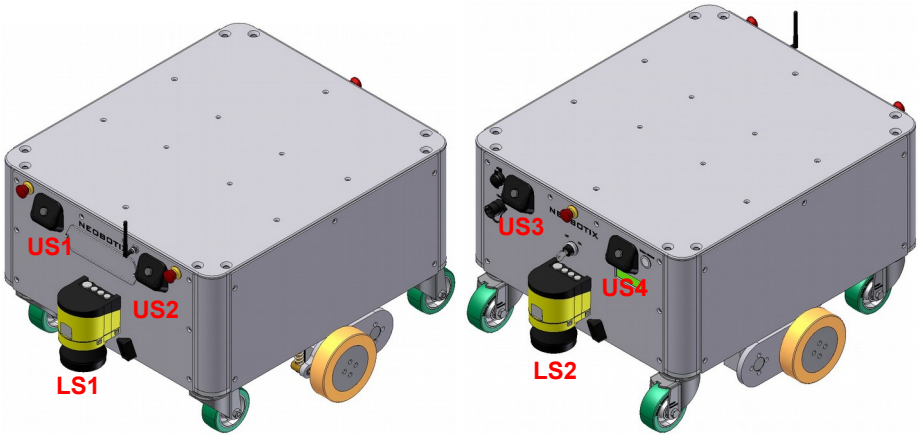

Figures 10 and 11: Positions of sensors

Default configuration (laser scanners centred):

Sensor	Symbol	X-pos.	Y-pos.	Z-pos.	a-angle	b-angle
Laser scanner 1	LS1	398	0	150	0	0
Laser scanner 2	LS2	-398	0	150	0	180
Ultrasonic sensor 1	US1	362	-146	389	-30	0
Ultrasonic sensor 2	US2	362	146	389	-30	0
Ultrasonic sensor 3	US3	-362	146	389	-30	180
Ultrasonic sensor 4	US4	-362	-146	389	-30	180

Edge configuration (laser scanners at front right and rear left corner, rotated by 45°):

Sensor	Symbol	X-pos.	Y-pos.	Z-pos.	a-angle	b-angle
Laser scanner 1	LS1	374,5	-336,5	150	0	-45
Laser scanner 2	LS2	-374,5	336,5	150	0	135
Ultrasonic sensors unchanged						

The working ranges of all ultrasonic sensors are set edgewise.

12.2 Electrical properties and miscellaneous data

Properties of internal components

All data are taken from the respective datasheets.

Description	Units	Value
Motor power	W	300
Rated motor speed	Rpm	3000
Maximum motor speed	Rpm	5000
Rated motor torque	Nm	0.95
Maximum motor torque	Nm	2.85
Brake torque (static)	Nm	1.47
Encoder resolution	Edges/Revolution	4096
Gear ratio	1	15:1
Rated battery voltage	V	24
Maximum unregulated voltage	V	30
Battery capacity	Ah	160

Metering capacities of sensors

All data are taken from the respective datasheets. Distances are measured in meters, angles are measured in degree.

Sensor	Resolution	Min. range	Max. range	Hor. angle	Vert. angle
Laser scanner	0.5°	0	30	±135	0
Ultrasonic sensors	~±0.01m	0.25	1.5	±60	±30

12.3 Connectors

TE Connectivity – HE14

	Pins	TE Connectivity	Farnell	RS Components
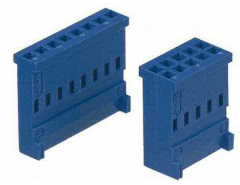	3 pins, 1 row	281838-3	429582	532-333
	4 pins, 1 row	281838-4	429594	532-349
	5 pins, 1 row	281838-5	429600	532-355
	6 pins, 2 rows	281839-3	429650	532-406
	8 pins, 2 rows	281839-4	429661	532-412
	10 pins, 2 rows	281839-5	429673	532-428
	12 pins, 2 rows	281839-6	429685	532-434
	Crimp contacts AWG 28-24	182734-2	429715	532-456

Table 2: HE14 connectors

Molex – Mini-Fit Jr.

	Pins	Molex	Farnell	RS Components
	2 pins	39-01-2020	151866	484-1748
	4 pins	39-01-2040	151867	484-1754
	6 pins	39-01-2060	151868	484-1760
	8 pins	39-01-2080	151869	484-1782
	10 pins	39-01-2100	151870	484-1798
	16 pins	39-01-2160	4138399	172-9011
	Crimp contacts AWG 24-18	39-00-0039	9732195	172-9134

Table 3: Mini-Fit Jr. connectors

13 Legal notes

Version information

This document has been translated and is not the original. Please refer to the German version in case of uncertainties or questions.

Liability

Every care has been taken in the preparation of this manual which represents the state of technology at the time of its composing. However, inaccuracies or omissions might occur. Please inform Neobotix in case you notice any.

The GPS GmbH, Neobotix, cannot be held responsible for any technical or typographical errors and reserves the right to make changes to the product and manual without prior notice.

Neobotix makes no warranty of any kind with regard to the material contained within this document, including, but not limited to, the implied warranties of merchantability and fitness for a particular purpose.

Neither the GPS GmbH nor Neobotix shall be liable or responsible for incidental or consequential damages in connection with the improper use of one or more of the products described in this manual.

Declaration of conformity

This product fulfils all relevant directives of the European Union. For further information please contact Neobotix.

Downloads and further information

Additional information, data sheets and documentations, also for the other products of Neobotix, can be found on our homepage www.neobotix.de/downloads.

Imprint

Neobotix GmbH

Weipertstr. 8-10, D-74076 Heilbronn

www.neobotix-roboter.de

Contact: Dipl.-Ing. Till May

Tel.: (+49) 7131 / 7669 - 300

e-mail: may@neobotix.de

MP-700-OperatingManual.odm, edited 12. May 2016 in Heilbronn, Germany

